TEST REPORT

Date: 03-05-2012

Reference: TEST REPORT ZINCROLYTE® vs DUPLEX®700 2012

Duroc NV – Corrosion Protection
Moerelei 149
2610 – Antwerp
Belgium
Written by: © Ing. Martijn Wirken - mw@duroc.be

ZINCROLYTE® vs DUPLEX®700

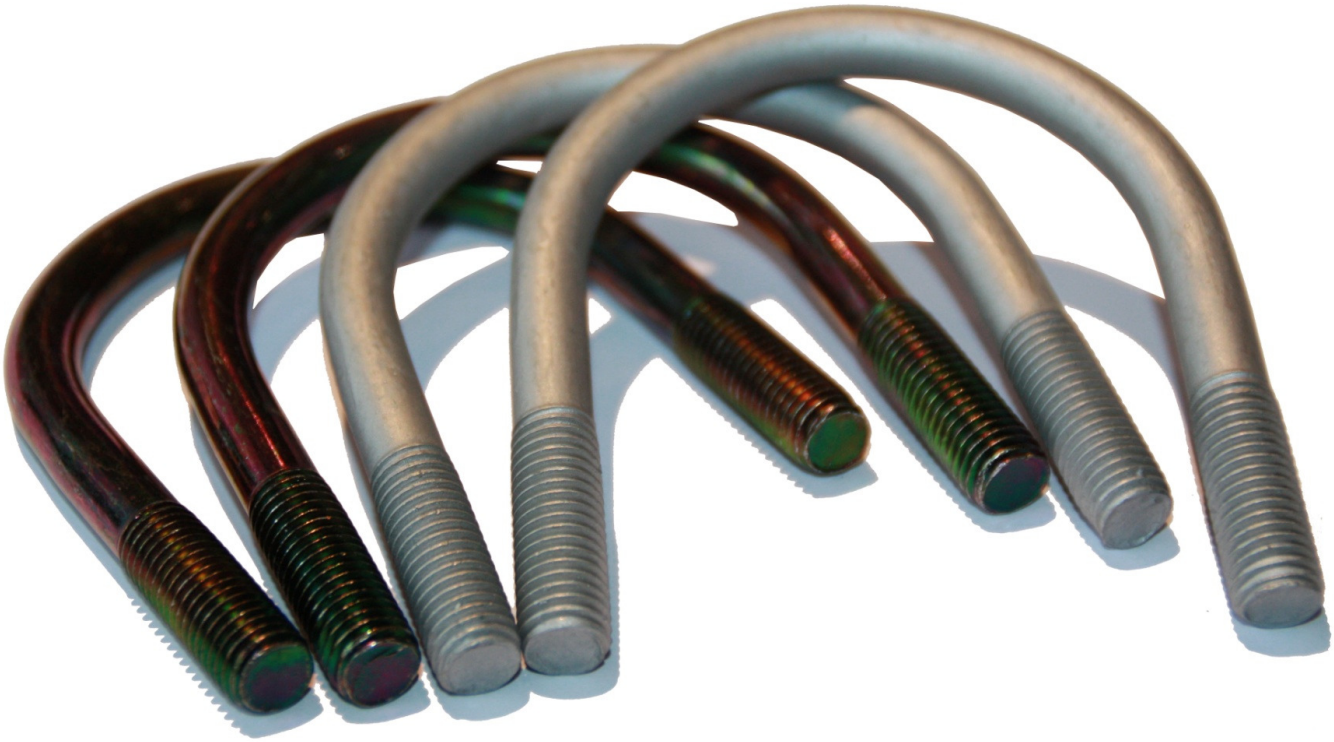

This document is not legally binding. The results were achieved by tests using the specified parameters. If you have any questions, ambiguities and for more detailed information please contact the author.

Content

DUROC CORROSION PROTECTION ☎ +32 (0)3/821.01.50 +32 (0)3/821.01.60 info@duroc.be www.duroc.be

Application area

Both surface treatments are used in areas where standard electroplated parts are too weak. But both systems has different properties, which can make the difference in specific applications.

Zincrolyte®

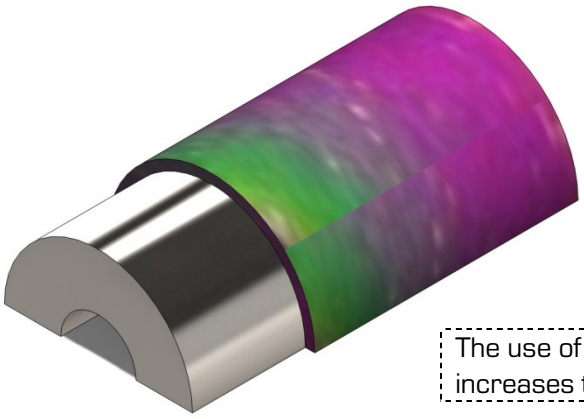

1. Steel substrate
2. Electrolytic deposit zinc-cobalt layer.
3. Passivation layer

The use of Cobalt in the base layer increases the corrosion resistance.

Figure 1 Schematic view of Zincrolyte®

Application area Zincrolyte®

Zinc Alloys Improve Corrosion Protection; Replace Cadmium

ZINCROLYTE® Zinc Alloys

ZINCROLYTE zinc alloys provide ductile coatings that offer greater corrosion protection than conventional zinc. The coatings as applied exhibit such high corrosion protection, they can be effective, environmentally acceptable alternatives to cadmium in many applications.

Because different plating applications and specifications require different performance characteristics, Enthone offers a full range of ZINCROLYTE acid or alkaline non-cyanide zinc alloy processes. These include zinc-cobalt, zinc-iron and zinc-nickel. Each provides distinctive performance characteristics such as improved ductility, corrosion resistance at elevated temperatures, or the ability to accept a durable non-silver black chromate. These alloy coatings can reduce manufacturing costs by accommodating a range of post plate forming operations such as bending, crimping, and flaring not possible with conventionally plated or painted finishes.

ZINCROLYTE zinc alloys are compatible with specific Enthone chromates, offering a wide color range for final finishes. These include blue-bright, clear, yellow, olive, and green and a true black without the need for silver.

In this case we test the zinc-cobalt version. The layer thickness of the test samples is average of 9,3 µm with a standard deviation of 2,6µm. As seen in the chart below.

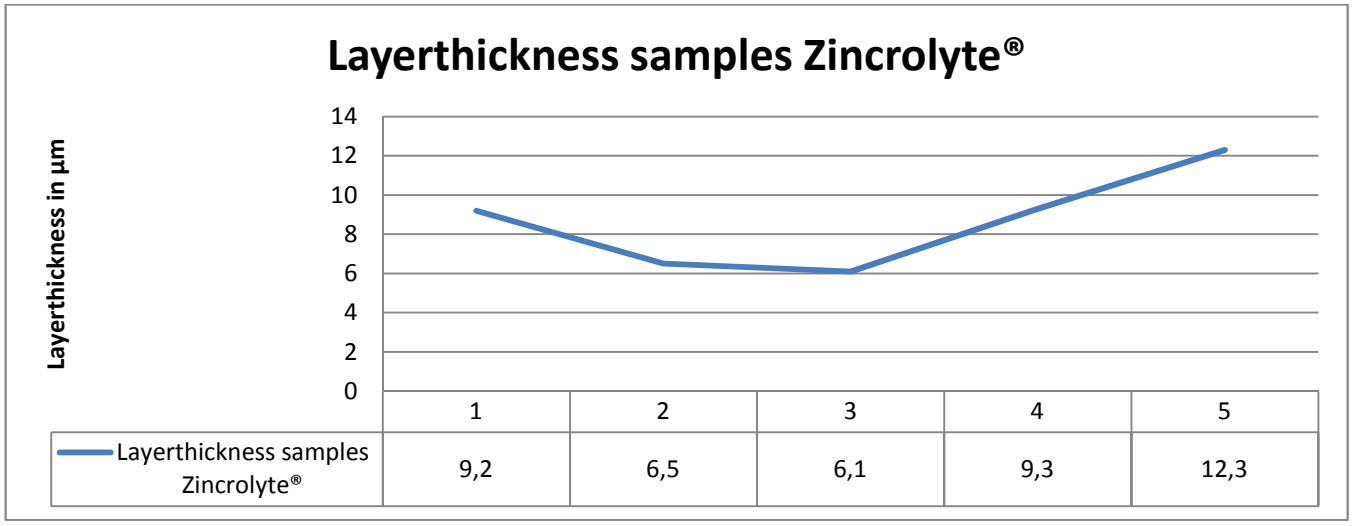

Figure 2 Layer thickness chart samples Zincrolyte

Standard treatment process

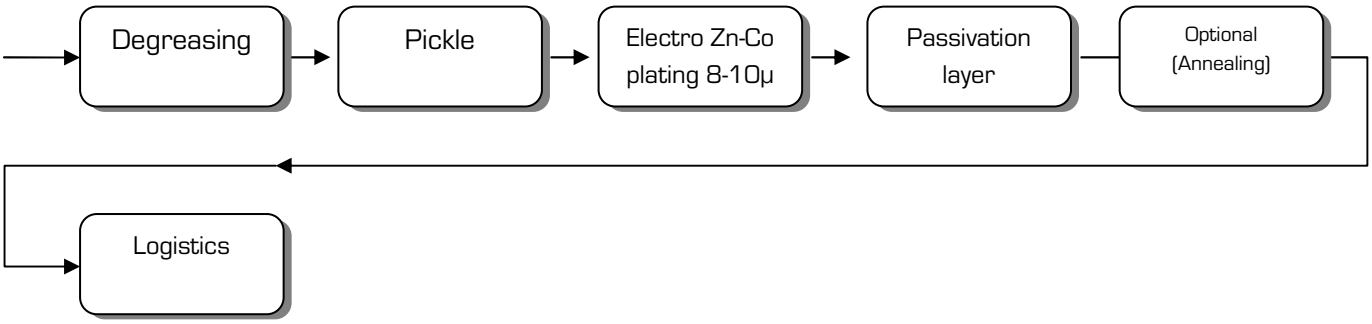

Features

- ✓ *No recess filling,*
- ✓ *Thin layer.*
- ✓ *Durable coating structure.*
- ✓ *Low temperature processing*
- ✓ *Greater corrosion protection than zinc coatings*
- ✓ *Effective substitute for cadmium plating*
- ✓ *Easily replaces cyanide and non-cyanide zinc processes*
- ✓ *Meets some automotive specifications*
- ✓ *Accepts a variety of post treatments*

DUROC CORROSION PROTECTION ☎ +32 (0)3/821.01.50 +32 (0)3/821.01.60 info@duroc.be www.duroc.be

DUPLEX®700

Chemical resistance top coating withstands environment versatile.

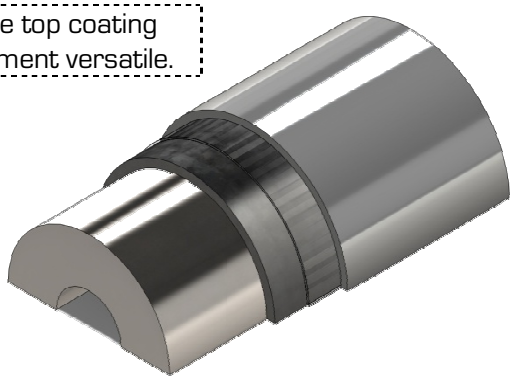

'00

1. Steel substrate
2. Electrolytic deposit zinc layer.
3. Conversion film
4. Rustproof top coating

Application area DUPLEX®700

DUPLEX® 700 is suitable for versatile applications. Whether it´s outside or inside a factory the use of DUPLEX gives applications a longer life span. Such as the use for **swimming pools**, because the top-coat is also resistant to chlorine. The use of stainless steel in this application is not done cause of the chromium is dissolved by chlorine, which will result in corrosion of the base material. Also in other applications like the **stable construction** is DUPLEX®700 common used, or the use in **wood constructions**, where the resins from the timber corrode the fastener.

Stables: *problem of corrosion, excrement oxidize urea. One in a subsequent phase arises Ammonia, however, oxidizes ammonia to include nitrogen dioxide, nitrogen dioxide dissolved in water (high humidity) resulting in final nitric acid. This affects metals, a kesternich test uses of sulfur dioxide to perform acid rain. This gives a faster reaction as nitric acid. This means that a Kesternichtest result is a great value on the resistance in stable industries.*

To have even a greater resistance against corrosion there are some different varieties in DUPLEX®.

-	DUPLEX® 700	700 hours salt spray test	8 rounds kesternich.
-	DUPLEX® 1000	1000 hours salt spray test	12 rounds kesternich.
-	DUPLEX® 1300	1300 hours salt spray test	15 rounds kesternich.
-	DUPLEX® 2000	2000 hours salt spray test	20 rounds kesternich.

Standard treatment process

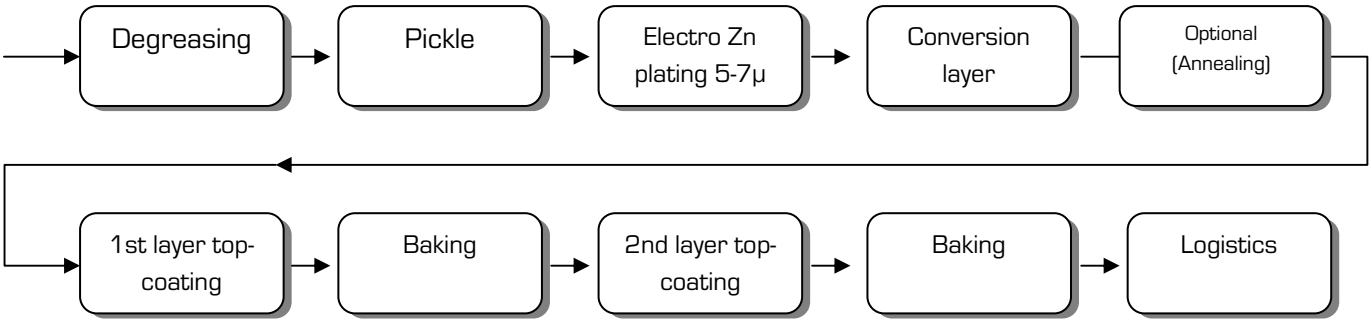

Features

- ✓ *No recess filling,*
- ✓ *Environment-friendly*
- ✓ *Thin layer, superior corrosion resistance*
- ✓ *Durable coating structure.*
- ✓ *Low temperature processing (220 °C)*
- ✓ *Low coefficient of friction 0,09-0,14*
- ✓ *Reduces contact corrosion between metals.*

DUROC CORROSION PROTECTION ☎ +32 (0)3/821.01.50 +32 (0)3/821.01.60 info@duroc.be www.duroc.be

Testing Method

- Application of the standard practice for operating salt spray (fog) apparatus (NEN EN ISO 9227), for the evaluation of the corrosion susceptibility in artificial atmospheres – Salt spray tests (ISO 9227:2006,IDT NSS)

- Cyclic corrosion tests (CCT): application of repeating exposure cycle of sulfur dioxide testing, condensing and drying conditions, for better correlation with real-life corrosive environments – Kesternichtest (NEN EN ISO 3231 SFW 2,0 S)

Salt spray (fog) test

Application of the standard practice for operating salt spray (fog) apparatus (NEN EN ISO 9227), for the evaluation of the corrosion susceptibility in artificial atmospheres – Salt spray tests (ISO 9227:2006,IDT NSS). This standard described the spraying of a salt solution in the camber at 35°C. The fine salt fog condenses on the test samples and initiates corrosion. A salt spray chamber according NEN EN ISO 9227 is supplied with a minimum volume of 400 liters.

Process parameters:

Salt concentration	50 g/L ±1
pH	6,6 – 6,9
Camber temperature	35°C
Precipitation	1,3 - 1,9 ml/h
Pressure	0,95 – 1,10 bar
Aggression scale*	2 - 3

Used cabinet:
Liebisch – SKB 1000 – A – TR

Figure 4 Liebisch – SKB 1000 – A - TR

*The scale of aggression is from 1- very aggressive till 5- less aggressive. According to RENAULT D17 1058/ - - H annex 1

Schematic diagram of one possible design of spray cabinet with means for treating fog exhaust and drain

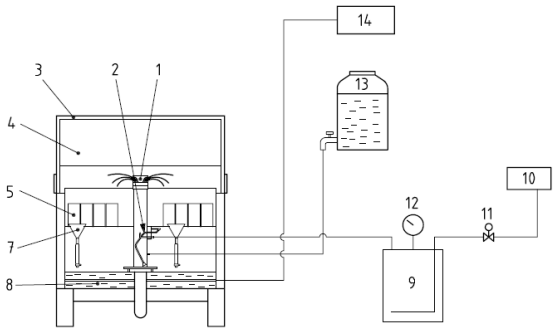

a) Front view

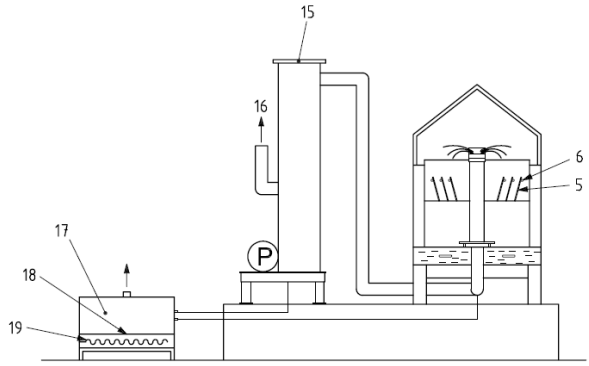

b) Side view

Key
1 mist dispersion tower
2 atomizer
3 cover
4 test chamber
5 test specimen
6 test-specimen support
7 fog collector
8 chamber
9 air saturator
10 air compressor
11 solenoid valve
12 pressure gauge
13 solution tank
14 temperature controls
15 exhaust-treatment disposal
16 air-outlet port
17 drain-treatment disposal
18 salt tray
19 heating elements

Figure A.1

Key
1 mist dispersion tower
2 atomizer
3 cover
4 test chamber
5 test specimen
6 test-specimen support
7 fog collector
8 chamber
9 air saturator
10 air compressor
11 solenoid valve
12 pressure gauge
13 solution tank
14 temperature controls
15 exhaust-treatment disposal
16 air-outlet port
17 drain-treatment disposal
18 salt tray
19 heating elements

Figure A.1 (*continued*)

DUROC CORROSION PROTECTION ☎ +32 (0)3/821.01.50 +32 (0)3/821.01.60 info@duroc.be www.duroc.be

Kesternichtest

Cyclic corrosion tests (CCT): application of repeating exposure cycle of sulfur dioxide testing (SO_2), condensing and drying conditions, for better correlation with real-life corrosive environments – Kesternichtest (NEN EN ISO 3231 SFW 2,0 S) This standard is a special condensation test with the addition of sulphur dioxide. It is dosed into the test chamber at the beginning of the test. The gas combines with the demineralized water to sulphurous acid. The contaminated condensate causes a chemical reaction.

Process parameters:

Volume SO_2	2,0 L
Camber temperature	40°C – 8h
Ventilation (escaping gas)	1 h
Cool down	21°C - 15 h

Used cabinet:
Liebisch – KBEA300

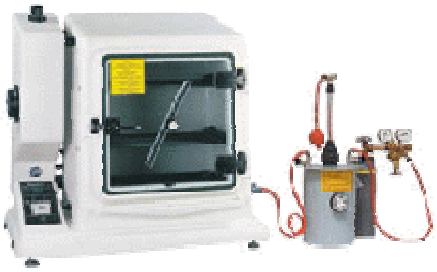

Figure 5 Liebisch – KBEA300

Inspection period

The inspection for the parts is fulfilled every 48 hours for the salt spray test. The computer analyses the current pressure, flow and temperature. If one of the parameters is different than the initial values, an alarm will occur and the process will ventilate and stop.

Inspection of the kesternichtest will be every cycle of 24 hours. Every 24 hours there need to be a new setup of gas and the cycle needs to be restarted.

DUROC CORROSION PROTECTION ☎ +32 (0)3/821.01.50 +32 (0)3/821.01.60 info@duroc.be www.duroc.be

Results Salt spray test

Salt Spray Test NEN EN ISO 9227 NSS after **168 hours**

- First small points of white rust occurs with the Zincrolyte® parts.

Left: ***DUPLEX® 700*** **Right:** ***Zincrolyte®***

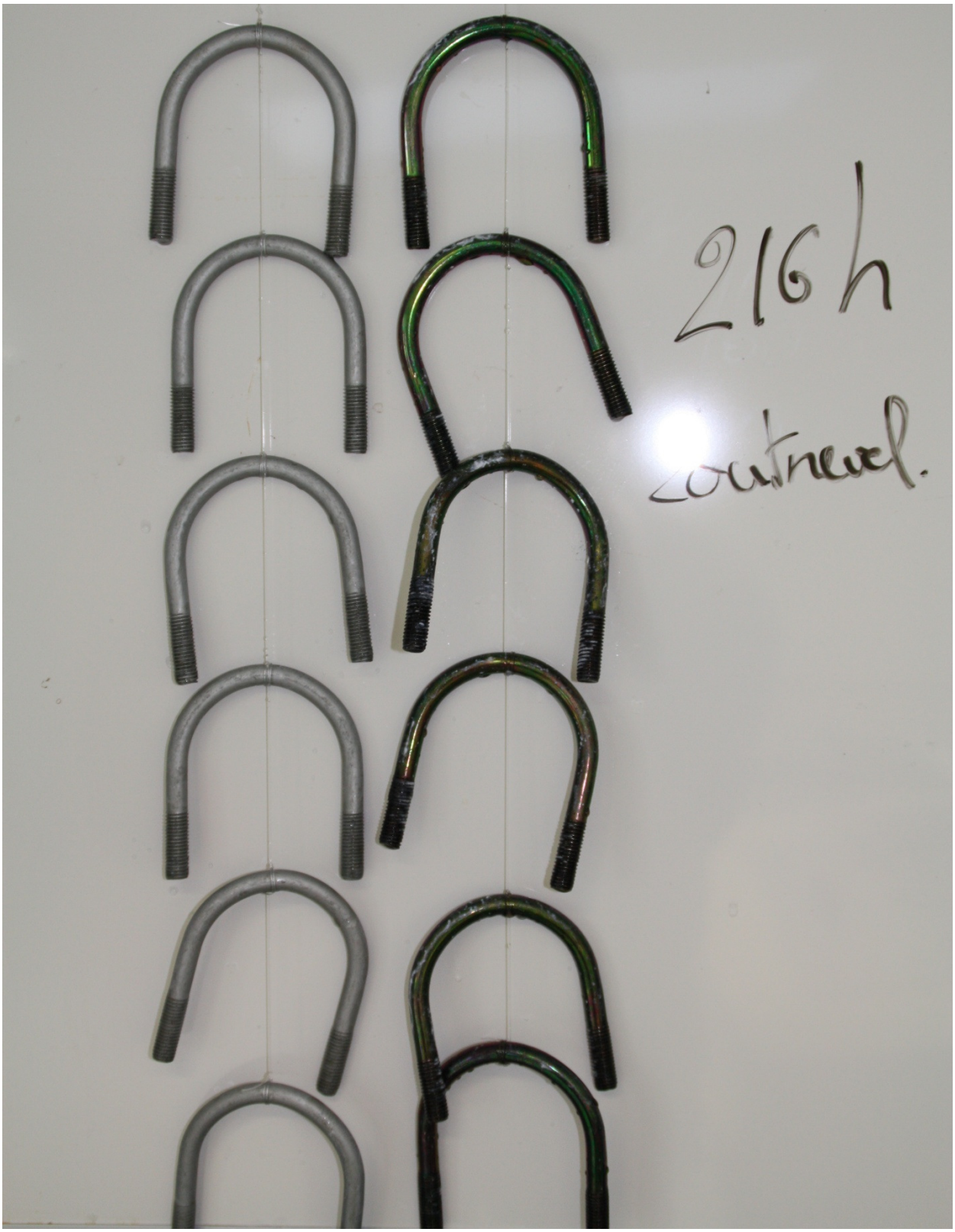

Salt Spray Test NEN EN ISO 9227 NSS after **216 hours**

Left: ***DUPLEX® 700*** **Right:** ***Zincrolyte®***

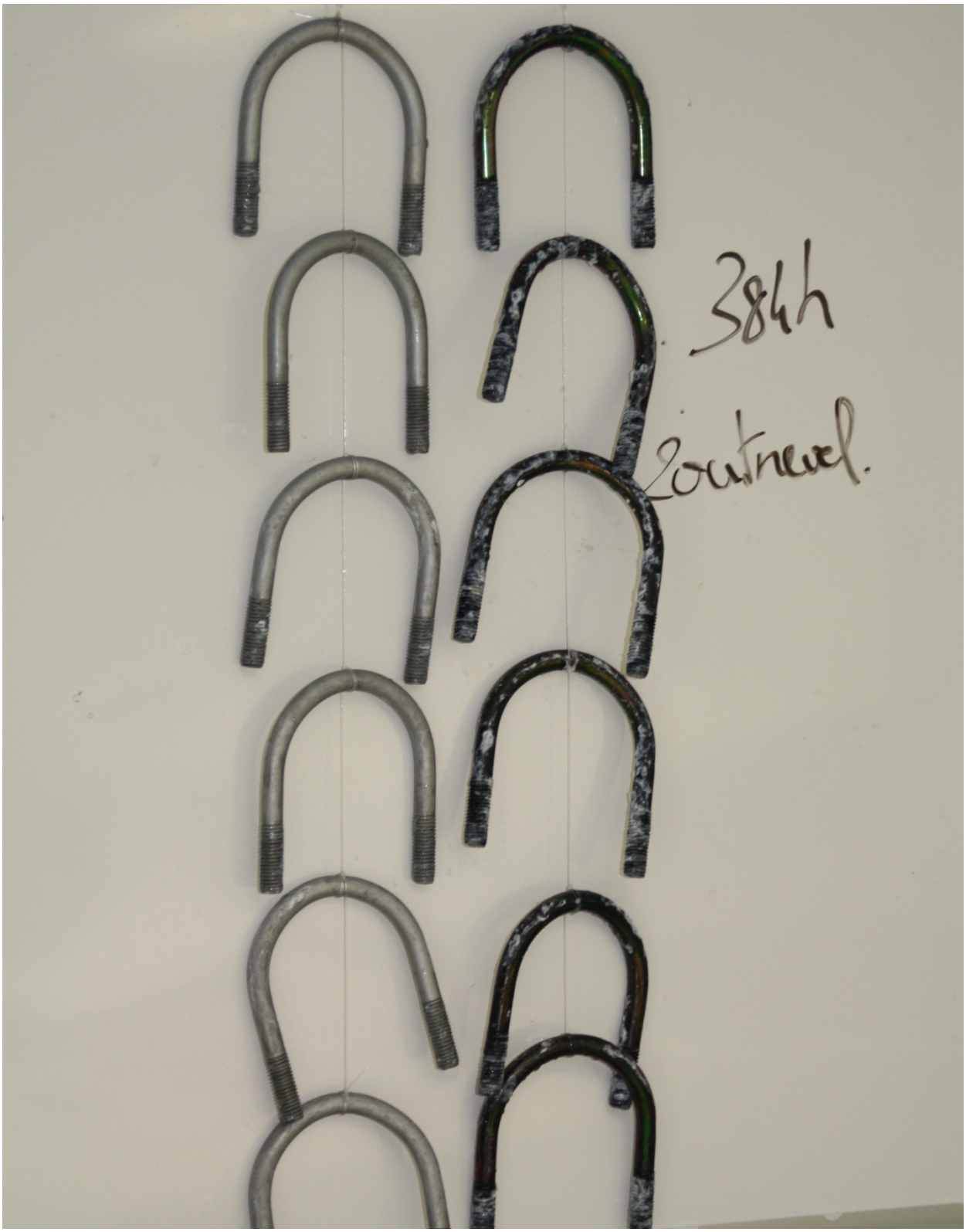

Salt Spray Test NEN EN ISO 9227 NSS after **384 hours**

- White rust is developing more and more with the Zincrolyte® parts.
- First white rust appears on the DUPLEX ®700 treated parts.

Left: ***DUPLEX® 700*** **Right:** ***Zincrolyte®***

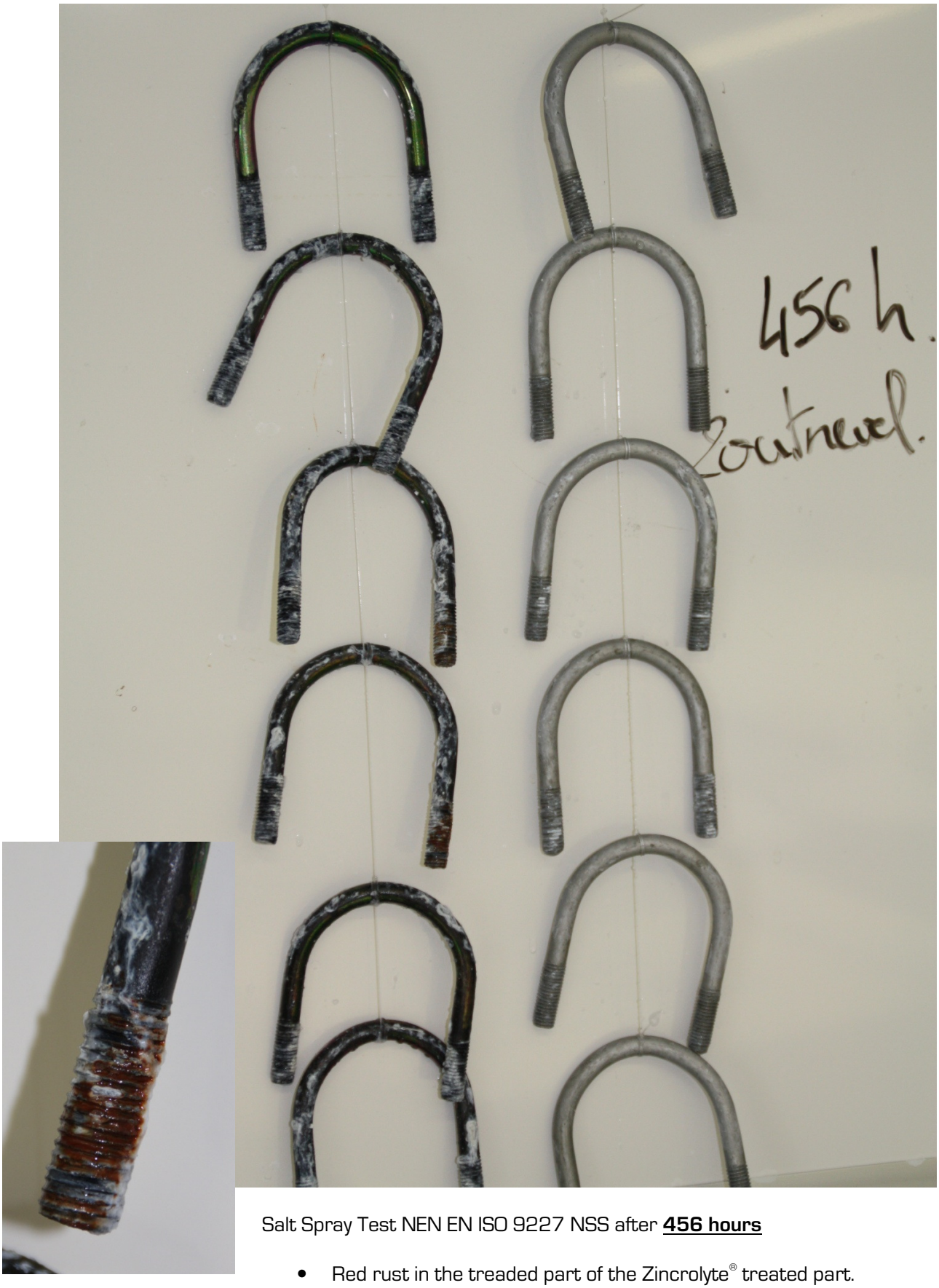

Salt Spray Test NEN EN ISO 9227 NSS after **456 hours**

- Red rust in the treaded part of the Zincrolyte® treated part.

Left: ***Zincrolyte®*** **Right:** ***DUPLEX® 700***

Salt Spray Test NEN EN ISO 9227 NSS after **456 hours**

- Red rust in the treaded part of the Zincrolyte® treated part.

Left: ***DUPLEX® 700*** **Right:** ***Zincrolyte®***

Salt Spray Test NEN EN ISO 9227 NSS after **624 hours**

- Strong red rust on the Zincrolyte® treated part.
- More and more white rust on the DUPLEX® 700 treated part.

Left: ***DUPLEX® 700*** **Right:** ***Zincrolyte®***

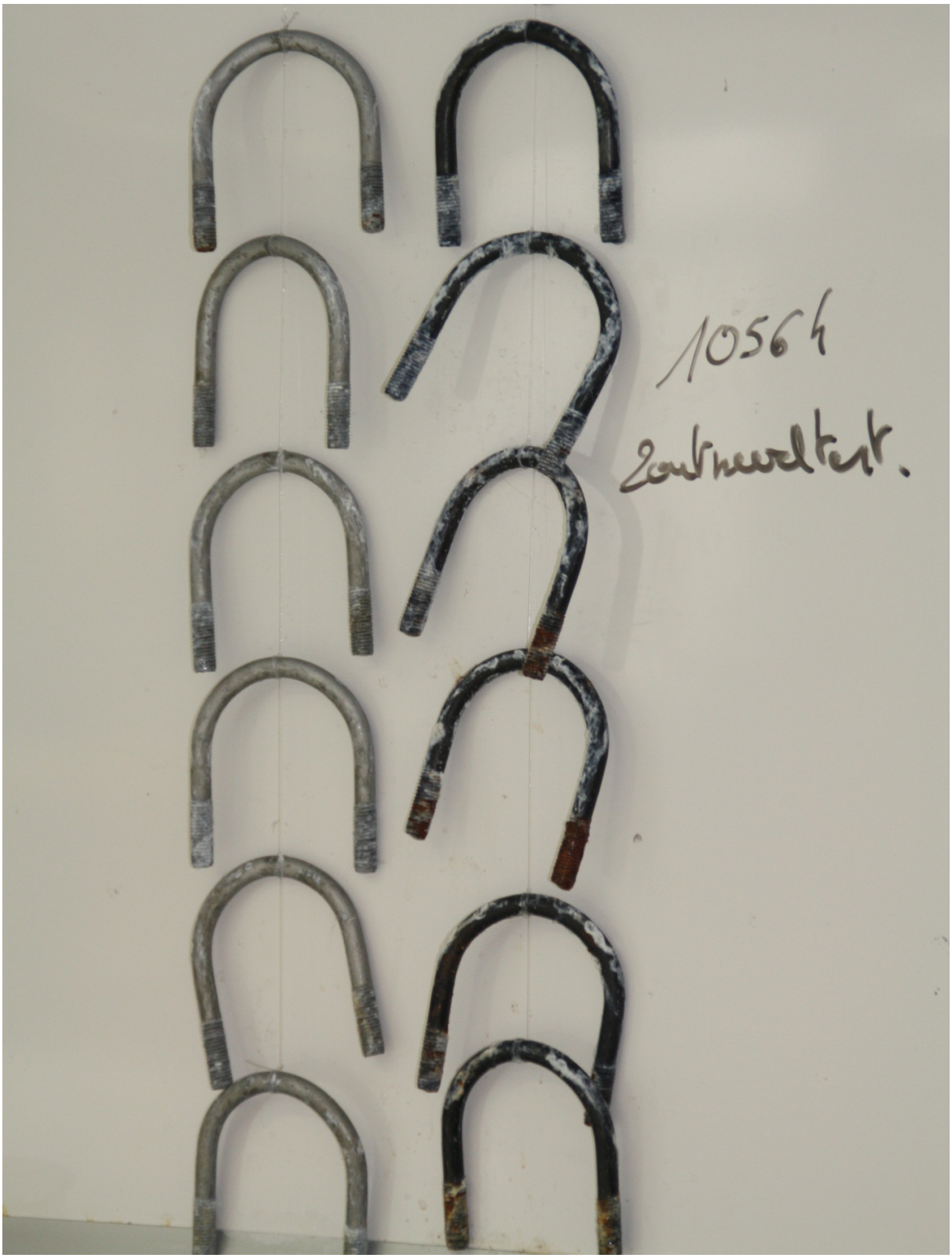

Salt Spray Test NEN EN ISO 9227 NSS after **1056 hours**

- Strong red rust on the Zincrolyte® treated part.
- More and more white rust on the DUPLEX® 700 treated part.

Left: ***DUPLEX® 700*** **Right:** ***Zincrolyte®***

Results Kesternichtest

Kesternichtest NEN EN ISO 3231 SWF 2,0L after **3 rounds.**

Left: ***Zincrolyte®*** **Right:** ***DUPLEX® 700***

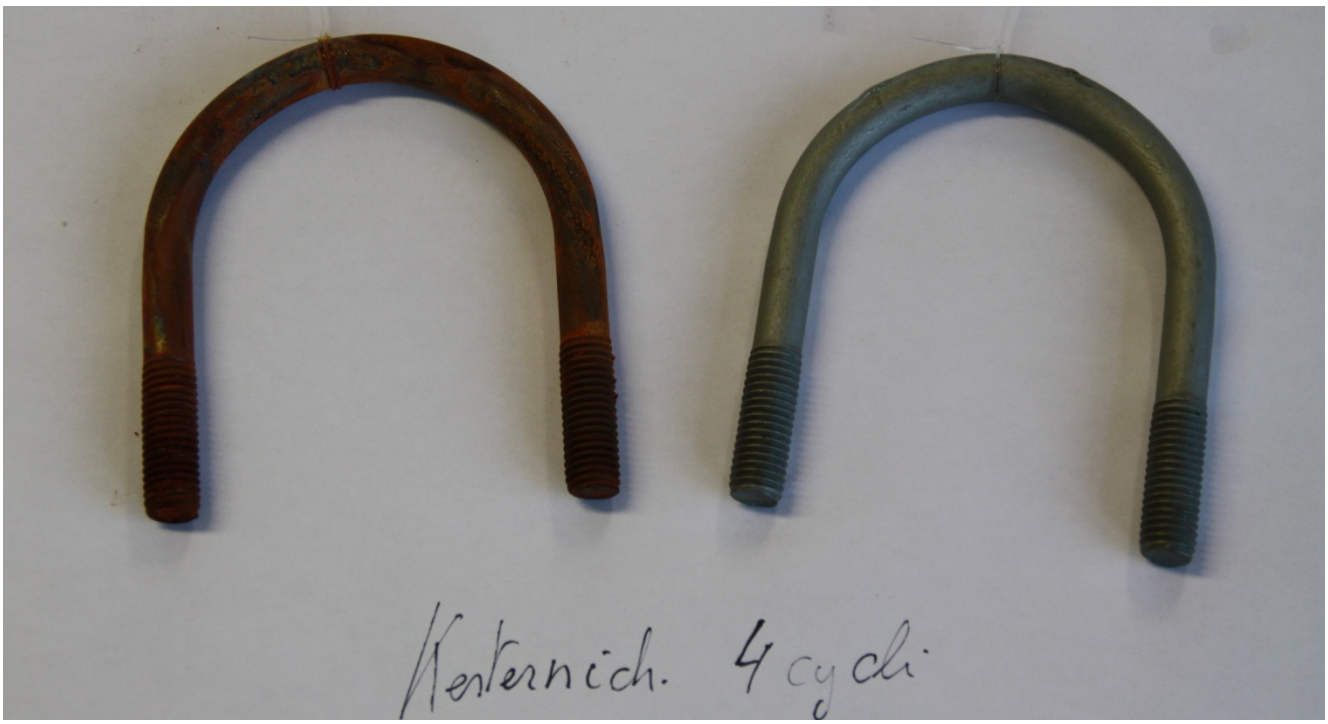

Kesternichtest NEN EN ISO 3231 SWF 2,0L after **4 rounds.**

Left: ***Zincrolyte®*** **Right:** ***DUPLEX® 700***

Kesternichtest NEN EN ISO 3231 SWF 2,0L after **5 rounds.**

Left: ***Zincrolyte®*** **Right:** ***DUPLEX® 700***

Kesternichtest NEN EN ISO 3231 SWF 2,0L after **6 rounds.** Blank steel appears on Zincrolyte® treated part.

Left: ***Zincrolyte®*** **Right:** ***DUPLEX® 700***

Kesternichtest NEN EN ISO 3231 SWF 2,0L after **7 rounds.**

Left: ***Zincrolyte®*** **Right:** ***DUPLEX® 700***

Kesternichtest NEN EN ISO 3231 SWF 2,0L after **8 rounds.**

Left: ***Zincrolyte®*** **Right:** ***DUPLEX® 700***

Kesternichtest NEN EN ISO 3231 SWF 2,0L after **9 rounds.**

Left: ***Zincrolyte®*** **Right:** ***DUPLEX® 700***

Kesternichtest NEN EN ISO 3231 SWF 2,0L after **10 rounds.**

Left: ***Zincrolyte®*** **Right:** ***DUPLEX® 700***

Kesternichtest NEN EN ISO 3231 SWF 2,0L after **11 rounds.**

Left: ***Zincrolyte®*** **Right:** ***DUPLEX® 700***

Kesternichtest NEN EN ISO 3231 SWF 2,0L after **12 rounds.**

Left: ***Zincrolyte®*** **Right:** ***DUPLEX® 700***

Kesternichtest NEN EN ISO 3231 SWF 2,0L after **13 rounds.**

Left: ***Zincrolyte®*** **Right:** ***DUPLEX® 700***

Kesternichtest NEN EN ISO 3231 SWF 2,0L after **14 rounds.** Red rust appears on DUPLEX treated part.

Left: ***Zincrolyte®*** **Right:** ***DUPLEX® 700***

Kesternichtest NEN EN ISO 3231 SWF 2,0L after **15 rounds.**

Left: ***Zincrolyte®*** **Right:** ***DUPLEX® 700***

Conclusion

The overall conclusion is that DUPLEX 700 performs better in both test methods.

- DUPLEX®700 performs **128% better** than Zincrolyte® in a salt spray test for white rust. (corrosion of the zinc layer)
- DUPLEX®700 performs **131% better** than Zincrolyte® in a salt spray test for red rust (corrosion of the base material)
- DUPLEX®700 performs **366% better** than Zincrolyte® in a kesternichtest for red rust (corrosion of the base material)

Salt spray (fog) test

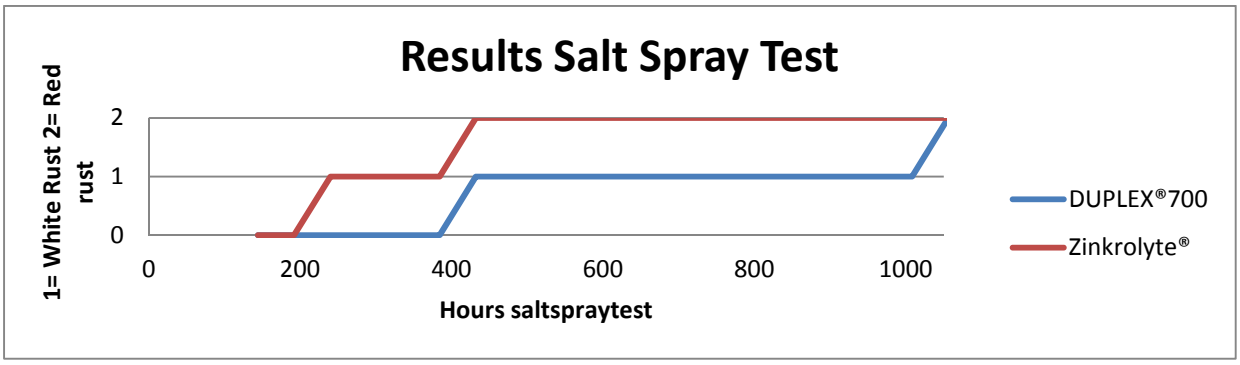

Figure 6 Results of salt spray test between Zincrolyte® and DUPLEX®700

Both systems perform as expected. The expected corrosion resistance of Zincrolyte® of 480h SST is not just met, but is in line with the expectations.

This means that compared to this system DUPLEX 700 for white rust performs 128% better as compared to Zincrolyte. And for red rust is this even an improvement of 131%.

Kesternichtest

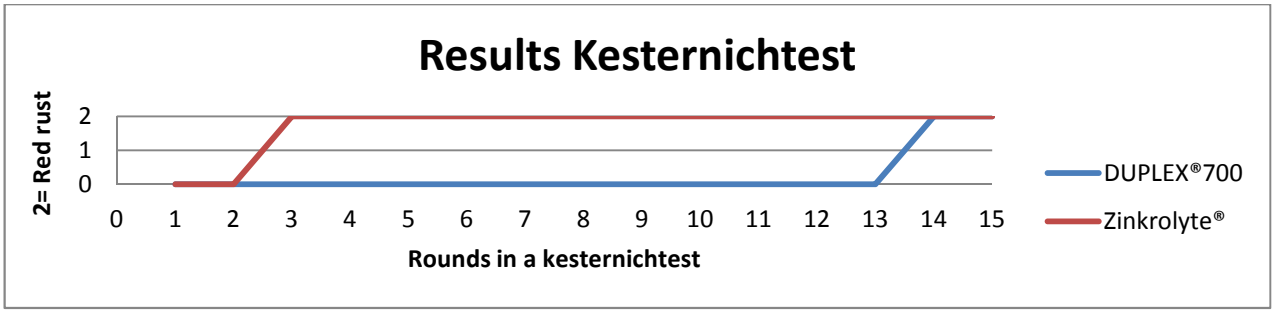

Figure 7 Results of kesternichtest between Zincrolyte® and DUPLEX®700

The kesternich resistance of Zincrolyte is very limited. After 3 rounds the entire part is corroded. While DUPLEX®700 withstands easily 13 rounds. The corrosion resistance against acid environment like in stables is 366% better with Duplex®700 instead of Zincrolyte.

Annex 1 Layer thickness measurement

DUROC
CORROSION PROTECTION

31/01/12 15:53:14

Order nr:	STAF17
Afmeting:	beugels
Caliber:	☐
Hechting:	☐
Behandeling:	Zinkcrolyte. extrem.

Laagdiktemetingen X-ray CMI C11034 Duroc N.V.

Row	Sample 1	Sample 2	Mean	Date	Time
1	9,2	6,5	7,8	31/01/12	15:48:49
2	6,1	9,3	7,7	31/01/12	15:49:40
3	12,3				

Statistics	USER DEFINED
Group Number	3
Mean	9,3
Range	4,6
Std Dev	2,6
Pct(%) Dev	28,0
Current Group Size	2

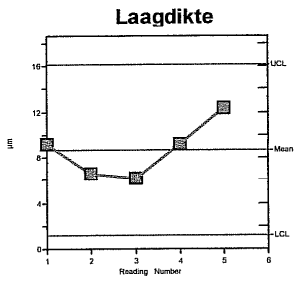

Duroc N.V. - Moerelei 149 - B-2610 - Wilrijk - Belgie - T: +32 3 821 01 50 - F: +32 3 821 01 60 - E: info1duroc.be - Page 1 / 1 -

Figure 8 Layer thickness measurements on Zincrolyte parts by X-ray.